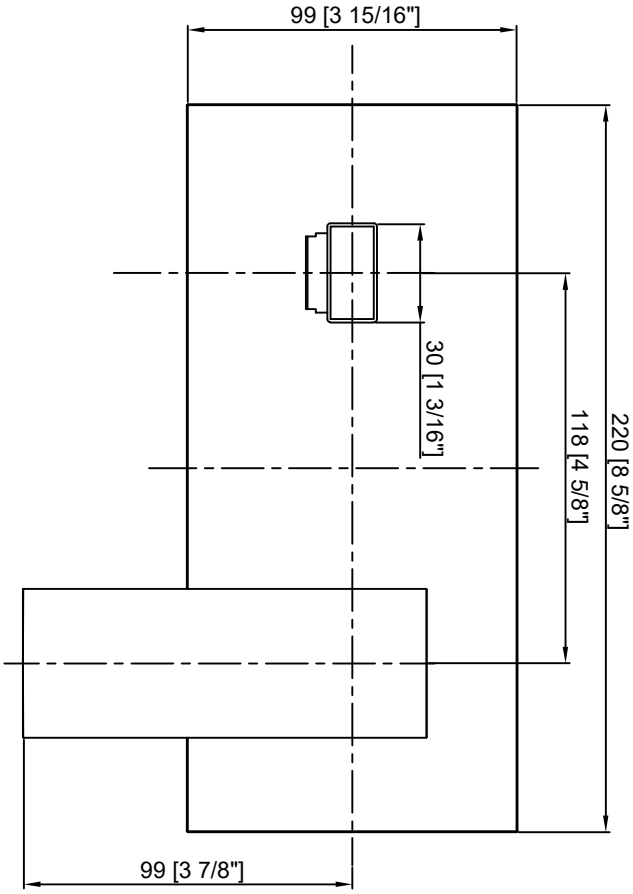
99 [3 15/16"]
220 [8 5/8"]
118 [4 5/8"]
30 [1 3/16"]
99 [3 7/8"]

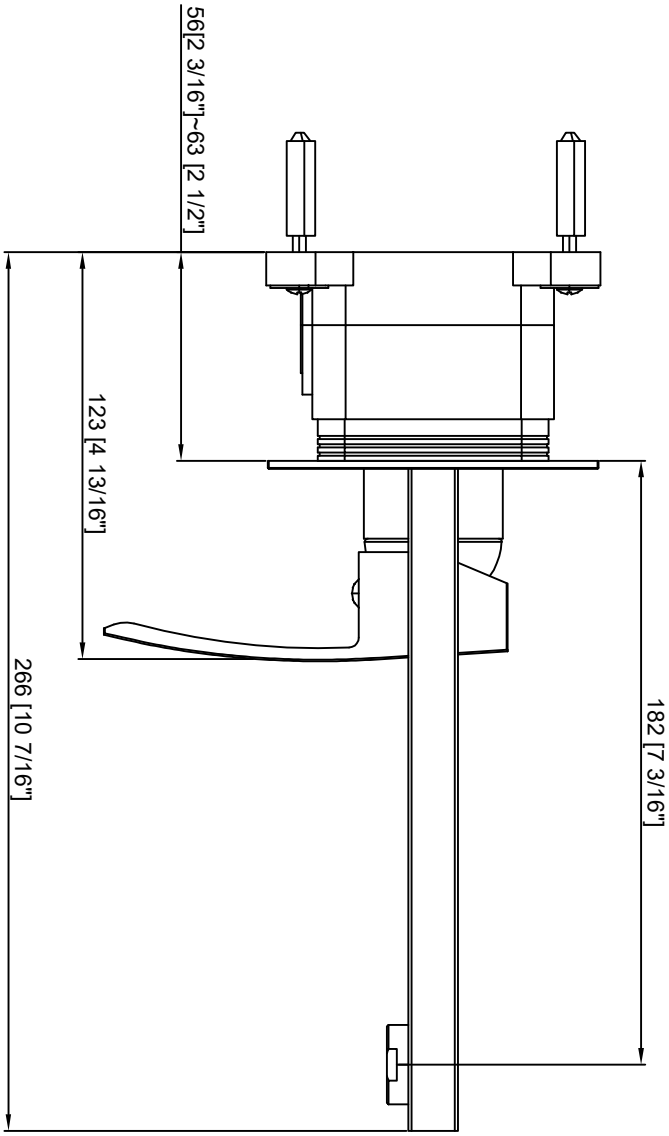
56[2 3/16"]~63 [2 1/2"]
123 [4 13/16"]
266 [10 7/16"]
182 [7 3/16"]