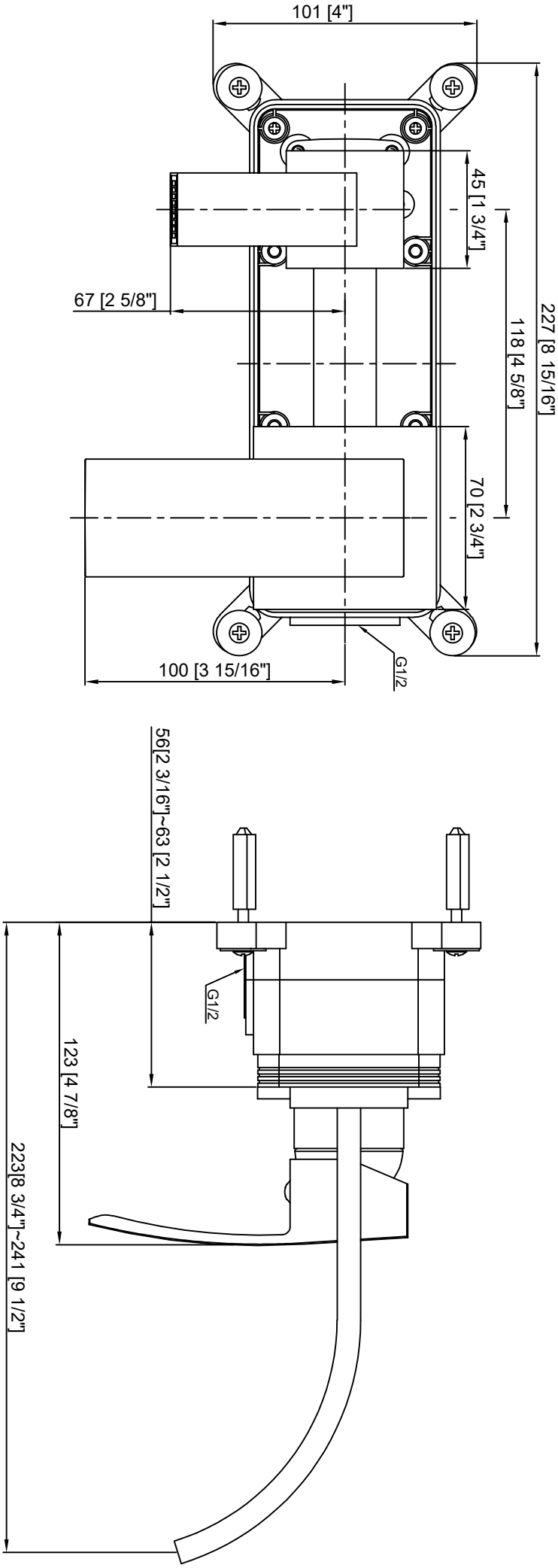
101 [4"]
227 [8 15/16"]
45 [1 3/4"]
118 [4 5/8"]
67 [2 5/8"]
70 [2 3/4"]
100 [3 15/16"]
G1/2
56[2 3/16"]~63 [2 1/2"]
G1/2
123 [4 7/8"]
223[8 3/4"]~241 [9 1/2"]