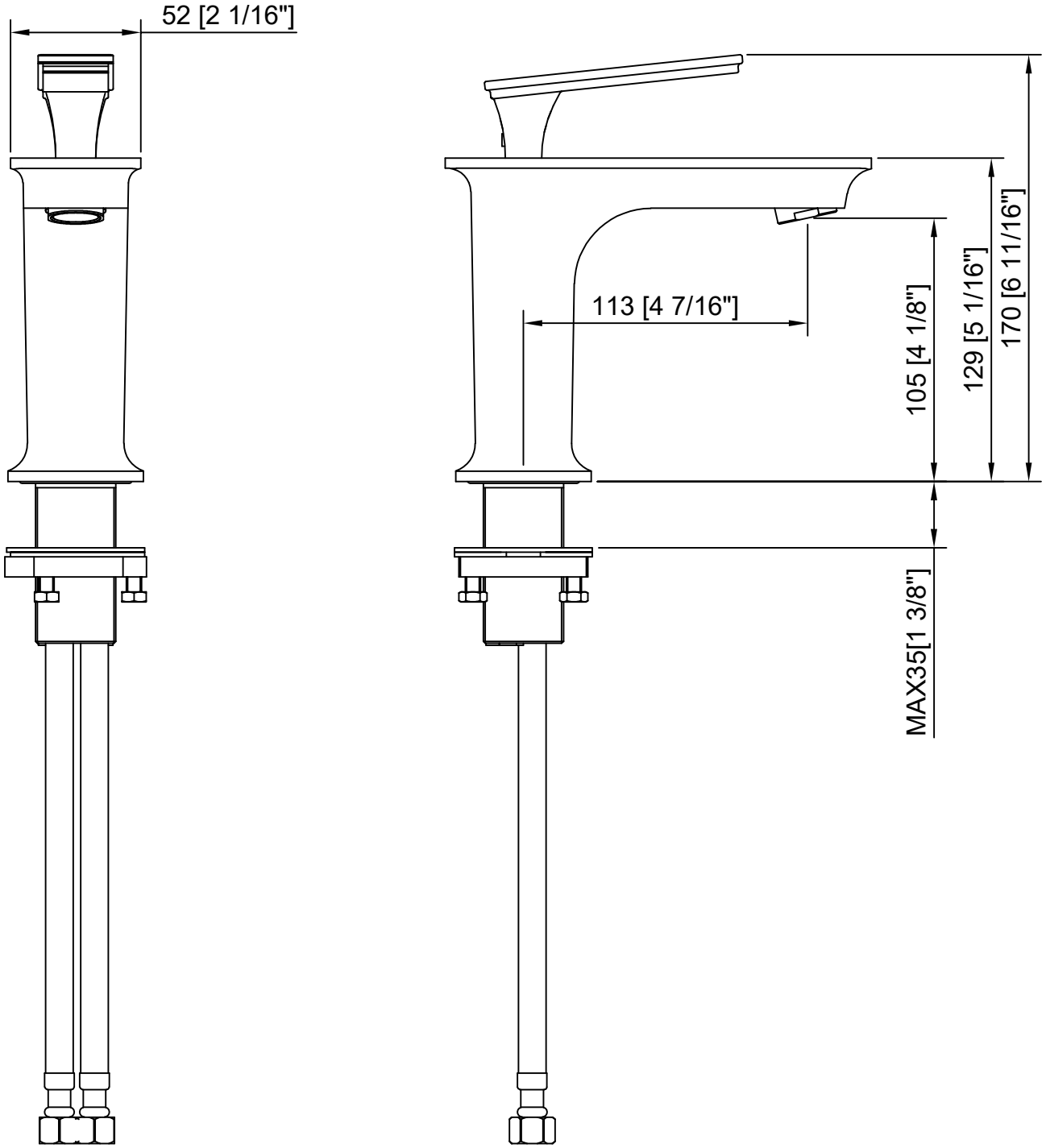
52 [2 1/16"]
113 [4 7/16"]
105 [4 1/8"]
129 [5 1/16"]
170 [6 11/16"]
MAX35[1 3/8"]